STUDIO•M

SM46453

Please consult your electrician for hanging fixture and wiring.

INSTALLATION AND SAFETY INSTRUCTIONS

FOR YOUR SAFETY

WARNING: BE SURE THE ELECTRICITY TO THE WIRES YOU ARE WORKING ON IS SHUT OFF EITHER THE FUSE REMDVED OR THE CIRCUIT BREAKER OFF

GENERAL

You don't need special tools to install this fixture, Be sure to follow the steps in the order given.Under no circumstances should a fixture be hung on house electrical wires, nor should a swag type fixture be installed on a calling which conteins a radiant type heating system. Read instructions carefully. If you are unclear as to how to proceed. consult a qualified electrician.

NOTE: Proper wiring is essential for the safe operation of this fixture. See page 2 alternative mounting method.

ASSEMBLY

Carefully remove the fixture from the carton and check that all parts are included, as shown in the Figure 1. Be careful not to misplace any of the acrews or parts which are needed to install this fixture.

STEP 1:

Peel protective coating off as follows:(If applicable). For easier removal. peel coating off at an angle holding it close to the fixture. Peel sides off before pealing the front faces.

NOTE: SOCKETS ARE FACTORY INSTALLED.
IF SOCKET IS NOT SECURE TO BACKPLATE,MAKE SURE SOCKET TABS ARE SNAPPED ONTO PRE-DRILLED HOLES IN BACKPLATE.

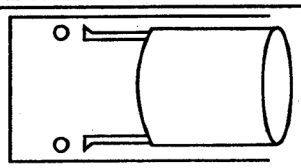

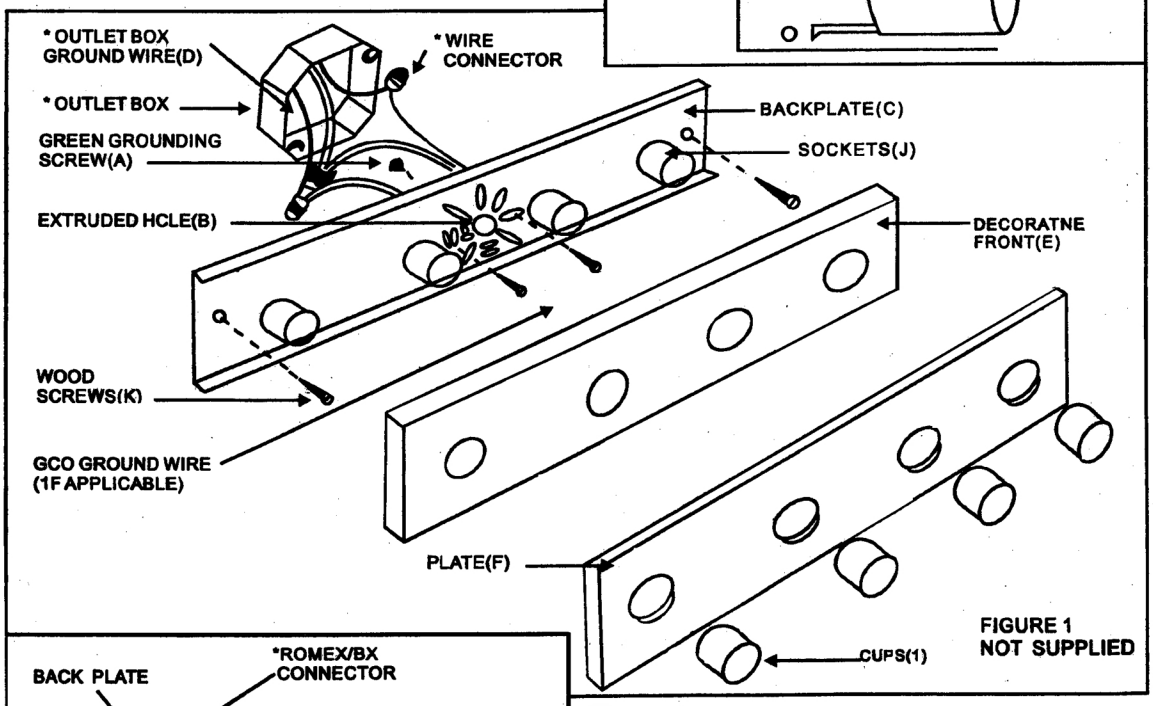

FIGURE 1
NOT SUPPLIED

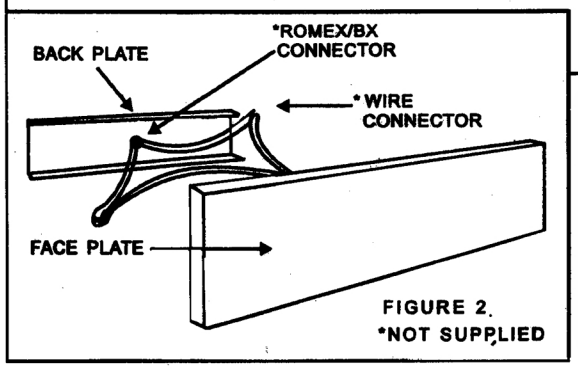

FIGURE 2.
*NOT SUPPLIED